CRYSTAL STRUCTURE OF A NEW FERRIC SULFATE MINERAL*

WANG QIGUANG (王奇光) AND LI WANMAO (李万茂)
(*Lanzhou University*)

Recieved April 9, 1986.

Key words: crystal structure, sulfate mineral, single crystal.

A new sulfate mineral which contains only ferric ion with an approximate chemical composition of $Fe_{3-x}(SO_4)_2 \cdot 14H_2O$ ($x \approx 0.33$) has been found in the oxidation zone of Xitieshan mine, Qinghai Province, China. Chemical analysis, thermal analysis and Mössbauer spectroscopy have shown that it is a sulfate mineral of new structure. Thus an X-ray structure analysis was performed with a single crystal of dimension of 0.2 × 0.2 × 0.4 mm.

I. EXPERIMENTAL

The single crystal of the mineral is coexistent with anhydrite. The newly selected crystal is light violet in colour, sparkling and transparent. But it is unstable in the air with the colour changing to dark-red and the disappearance of the reflection points in the X-ray film. Therefore, the crystal was sealed into a glass capillary for determination immediately after it was picked out.

Using an ENRAF-NONIUS CAD_4 four-circle automatic single-crystal diffractometer, unit-cell dimensions and orientation matrix were obtained from the least-squares refinement at setting angle of preliminary 25 reflections. The crystal belongs to the triclinic system with its crystallographic parameters given in Table 1.

Table 1

Crystallographic Parameters

Space group: $P\bar{1}$		
$a = 6.448(16)$ Å	$b = 15.248(21)$ Å	$c = 6.307(14)$ Å
$\alpha = 90.14(2)°$	$\beta = 100.93(2)°$	$\gamma = 94.12(2)°$
$V = 607.2$ Å^3		
$D_m = 2.17$ g/cm^3		$D_c = 2.20$ g/cm^3
$Z = 1$		
$F(000) = 410$		$\mu K_\alpha = 22.2$ cm^{-1}

* The diagrams of this report were plotted with the ORTEP software[3].

A total of 2345 reflections were collected with graphite monochromated MoKα radiation ($\lambda = 0.7107$ Å) in a range of $2 < \theta < 25°$. Among them 2120 reflections are greater than 3.0 σ in intensity. The standard reflections were checked twice of 60 min and the orientation was examined for every 300 reflections during the data collection.

All reflections were corrected for standard intensity and PL factors. An approximate absorption correction was made as well. The values for F were reduced to absolute scale with the Wilson statistics ($K = 0.171$, $B = 1.380$). The statistics $\langle |E^2 - 1| \rangle = 0.958$ show that the crystal has a symmetric centre and space group of $P\bar{1}$.

II. Structure Solution

The chemical formula and the space group of the mineral imply that one of the ferric ions may be located on a special position. On the basis of this assumption, the position of the other ferric ion was determined from the Patterson map. Two sulphur atoms were found from the results of the direct method by Karle cycle technique. The position coordinates of 15 oxygen atoms were detected in several cycles of Fourier syntheses and difference Fourier syntheses and the R factor corrected by the least-squares method dropped from 0.16 to 0.08. 14 hydrogen atoms were revealed in the last cycle of difference Fourier synthesis and the final R factor is 0.026, maximum shifting of the parameters is 0.12. All calculations were performed on a PDP 11/44 computer, using the SPD software package[1].

Table 2

Positional Parameters and Standard Deviations

Atom	x	y	z
Fe1	0.0000	0.0000	0.0000
Fe2	0.66186(8)	0.31973(3)	0.40413(8)
S1	0.4075(1)	0.16743(6)	0.6631(1)
S2	1.2400(1)	0.38624(6)	1.0916(1)
O1	1.1120(5)	−0.0475(2)	1.3105(5)
O2	0.7524(5)	0.0492(2)	1.1298(6)
O3	1.1780(6)	0.1167(2)	1.0868(5)
O4	0.5692(4)	0.2075(2)	0.5137(4)
O5	1.3791(4)	0.3298(2)	1.2417(5)
O6	0.7806(4)	0.4354(2)	0.3013(4)
O7	0.9652(4)	0.3072(2)	0.5561(4)
O8	0.7426(4)	0.2542(2)	0.1541(4)
O9	0.6217(4)	0.3876(2)	0.6632(4)
O10	1.1950(4)	0.1693(2)	0.5005(4)
O11	1.4167(5)	0.2186(2)	0.8310(4)
O12	0.5391(5)	−0.0774(2)	0.3243(5)
O13	0.1749(4)	0.4564(2)	0.2179(5)
O14	0.0544(4)	0.3301(2)	−0.0106(4)
O15	1.3567(4)	0.4423(2)	0.9310(4)

III. Description of the Structure

The crystal structure apparently consists of two groups, i. e. $[Fe(H_2O)_6]^{3+}$ and $[Fe(H_2O)_4(SO_3)_2]^{-1}$. There are one $[Fe(H_2O)_6]^{3+}$ and two $[Fe(H_2O)_4(SO_3)_2]^{1-}$ in each unit cell, and the $[Fe(H_2O)_4(SO_3)_2]^{1-}$ groups are related with the symmetric centre (1/2, 1/2, 1/2).

In the group of $[Fe(H_2O)_6]^{3+}$, the ferric ion is located at the centre of octahedron (the origin of the cell) surrounded by six oxygen atoms at the apices of an octahedron with a mean distance of 2.090 (3) Å. This distance is a little shorter

Table 3

Bond Lengths

Bond	Length	Bond	Length
Fe1—O1	2.104(3)	S2—O15	1.457(3)
Fe1—O2	2.109(4)	O1—H11	0.849(3)
Fe1—O3	2.061(3)	O1—H12	0.920(3)
Fe2—O4	1.944(3)	O2—H21	0.906(4)
Fe2—O5	1.932(3)	O2—H22	0.950(3)
Fe2—O6	2.029(3)	O3—H31	0.887(3)
Fe2—O7	2.031(2)	O3—H32	0.888(4)
Fe2—O8	2.033(3)	O6—H61	0.886(3)
Fe2—O9	2.000(3)	O6—H62	0.976(3)
S1—O4	1.495(3)	O7—H71	0.950(2)
S1—O10	1.466(3)	O7 -H72	0.780(3)
S1—O11	1.459(3)	O8—H81	0.821(3)
S1—O12	1.452(3)	O8—H82	0.936(2)
S2—O5	1.496(3)	O9—H91	0.828(3)
S2—O13	1.462(3)	O9—H92	0.924(3)
S2—O14	1.464(3)		

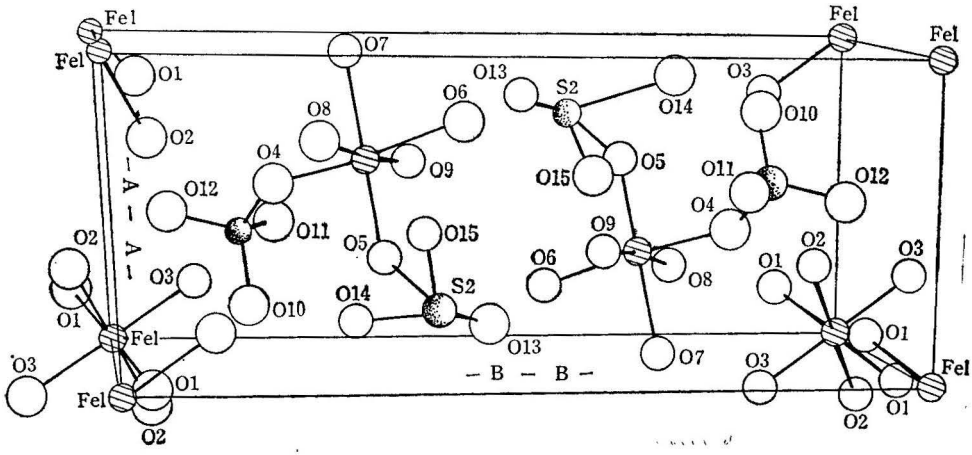

Fig. 1. Crystal structure.

than 2.112 Å, the distance between ferrous ion and oxygen present in Römerite[2]. It is obvious that the mean radius of ferric ion is smaller than that of ferrous ion, by loss of another eletron.

Table 4

Bond Angles

Bond	Angle	Bond	Angle	Bond	Angle
O1—Fe1—O1	180.00	O6—Fe2—O9	86.2(1)	Fe1—O2—H22	115.9(3)
O1—Fe1—O2	86.6(1)	O7—Fe2—O8	85.3(1)	H21—O2—H22	116.7(4)
O1—Fe1—O2	93.4(1)	O7—Fe2—O9	87.9(1)	Fe1—O3—H31	119.3(4)
O1—Fe1—O3	89.1(1)	O8—Fe2—O9	172.8(1)	Fe1—O3—H32	123.8(3)
O1—Fe1—O3	90.9(1)	O4—S1—O10	110.1(2)	H31—O3—H32	116.0(4)
O2—Fe1—O2	180.00	O4—S1—O11	108.8(2)	Fe2—O4—S1	141.0(2)
O2—Fe1—O3	89.0(1)	O4—S1—O11	106.0(2)	Fe2—O5—S2	144.8(2)
O2—Fe1—O3	91.0(1)	O10—S1—O11	108.8(2)	Fe2—O6—H61	115.5(2)
O3—Fe1—O3	180.00	O10—S1—O12	110.6(2)	Fe2—O6—H62	128.7(2)
O4—Fe2—O5	89.7(1)	O11—S1—O12	112.4(2)	H61—O6—H62	110.4(3)
O4—Fe2—O6	175.7(1)	O5—S2—O13	108.7(2)	Fe2—O7—H71	119.2(2)
O4—Fe2—O7	91.3(1)	O5—S2—O14	106.9(2)	Fe2—O7—H72	130.5(2)
O4—Fe2—O8	88.9(1)	O5—S2—O15	109.0(2)	H71—O7—H72	97.2(2)
O4—Fe2—O9	93.7(1)	O13—S2—O14	109.9(2)	Fe2—O8—H81	128.3(2)
O5—Fe2O6	94.5(1)	O13—S2—O15	111.3(2)	Fe2—O8—H82	107.9(2)
O5—Fe2—O7	176.2(1)	O14—S2—O15	111.0(2)	H81—O8—H82	97.4(2)
O5—Fe2—O8	91.0(1)	Fe1—O1—H11	123.7(2)	Fe2—O9—H91	129.1(2)
O5—Fe2—O9	95.8(1)	Fe1—O1—H12	113.9(3)	Fe2—O9—H92	119.9(2)
O6—Fe2—O7	84.5(1)	H11—O1—H12	108.9(4)	H91—O9—H92	110.7(3)
O6—Fe2—O8	90.7(1)	Fe1—O2—H21	127.4(3)		

In the group of $[Fe(H_2O)_4(SO_3)_2]^{1-}$, the ferric ion is also located in the centre of an octahedron and surrounded by four water molecules and two oxygen atoms belonging to different $(SO_4)^{2-}$ groups, which are located at six apices of the octahedron. The mean distance between ferric ion and oxygen atoms of water molecules is 1.938 Å, which is in good agreement with that found in Römerite. In $(SO_4)^{2-}$ the mean S—O bond length is 1.496 Å, but the two bond lengths connected with the iron ion O_4—S_1 and O_5—S_2 (1.495 and 1.496 Å respectively) are greater than that of the other six S—O bonds, because the electron cloud is stretched along this direction under the influence of the Fe^{3+} ion.

Because only ferric ions but no ferrous ions are present in this mineral as confirmed by the Mössbauer spectrum, some random vancancies of Fe^{3+} ion on the origin of the crystal cell are found due to the requirement of electronic neutrality of the crystal. The occupation ratio of the ferric ions was calculated to be 0.68 after correction, which is in good agreement with the result obtained by chemical analysis.

The crystals are linked together by electrostatic force and hydrogen bonds. Due to the presence of quite a number of hydrogen bonds the crystal compacts tightly as indicated by the high resolution diffraction spectrum, the small thermal vibration of atoms and the greater crystal density. The hydrogen bonds in the crystal are

presented in Table 5.

Table 5

Hydrogen Bonds in Crystal

Atom	Distance (Å)	H	Distance (Å)	Atom	Angle(degree)
O1	0.920(3)	H12	1.904(3)	O12	167.5(2)
O2	0.906(4)	H21	1.861(3)	O12	157.4(2)
O3	0.887(4)	H31	1.860(3)	O10	159.4(2)
O3	0.888(4)	H32	1.941(3)	O11	175.0(2)
O6	0.886(3)	H61	1.818(3)	O13	167.4(2)
O6	0.976(3)	H62	1.782(3)	O15	162.5(2)
O7	0.950(2)	H71	1.753(3)	O14	175.5(2)
O7	0.780(3)	H72	1.943(3)	O10	170.5(2)
O8	0.821(3)	H81	1.838(3)	O14	161.8(2)
O8	0.936(2)	H82	1.737(3)	O11	167.8(2)
O9	0.828(3)	H91	1.976(3)	O15	144.9(2)
O9	0.924(3)	H92	1.755(3)	O13	167.8(2)

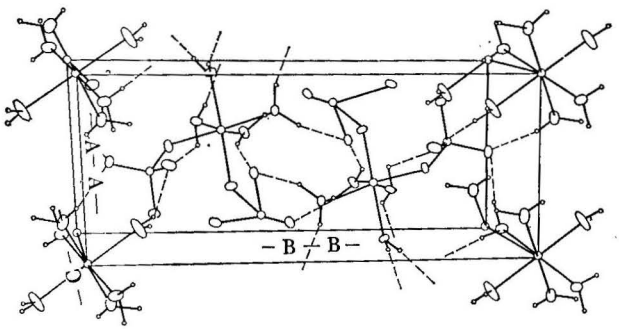

Fig. 2. Hydrogen bonds in crystal.

IV. Conclusion

The crystal structure of the new sulfate mineral containing only ferric ions has been determined and compared with Römerite[2] discovered in Dexter Mine, Utah, USA, which contains both ferric and ferrous ions.

References

[1] Frenz, B. A., *The Enraf-Nonius CAD4 SPD Real Time System for Concurent X-ray Data Collection and Structure Determination*, Delft University Press, Delft, Holland, 1978.

[2] Nunzi, A. & Zanazzi, P. F., Crystal structure of romerite, *American Minerologist*, **55**(1970), 78.

[3] Carroll, K. J., *Ortep Fortran Programme*, ORNL-5138, 3rd revision, Oak Ridge National Laboratory, 1976.